DRAWING WAS CREATED USING AUTODESK INVENTOR. SCALING MUST BE USED IN AUTOCAD.

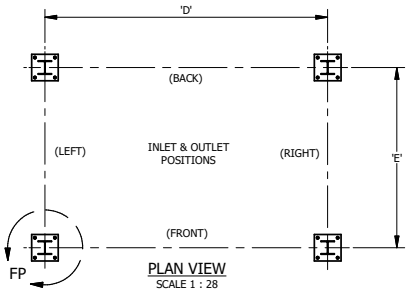

PLAN VIEW
SCALE 1 : 28

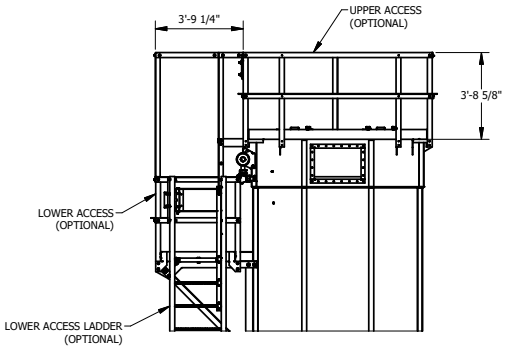

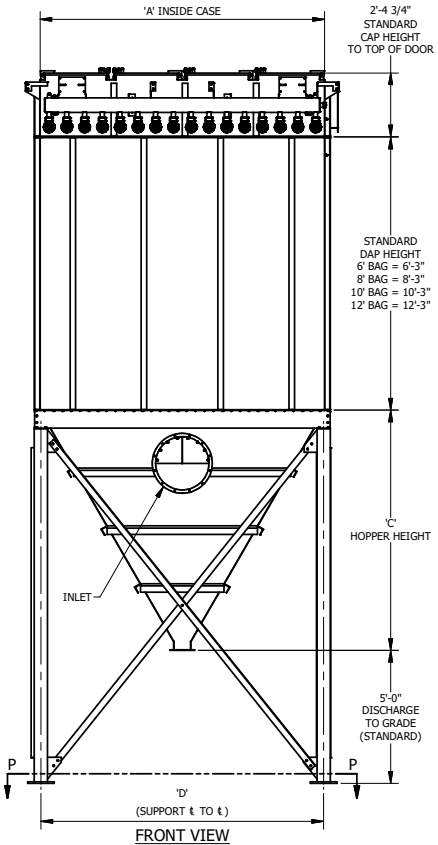

FRONT VIEW

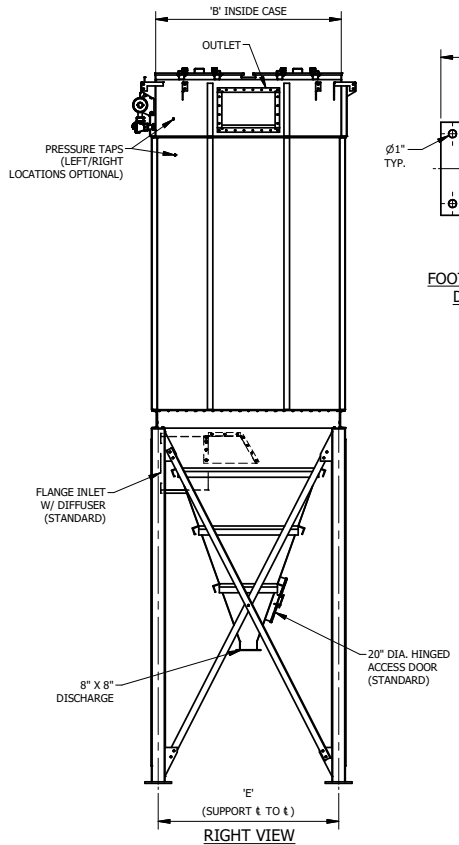

RIGHT VIEW

(STJ-1610-10 SHOWN)
SCALE 1 : 28

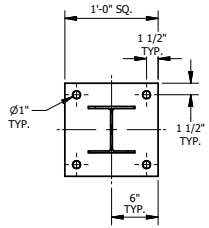

FOOT PAD DETAIL
DETAIL FP
SCALE 1 : 8

Standard STJ Sizes											
Model No.	Bag Length (ft.)	Bag Dia. (in.)	Cloth Area (sq.ft.)	Bag Qty.	*Air Usage (SCFM @ 90 psig)*	Hopper Qty.	A	B	C	D	E
STJ-1010-	6	4.5 / 6	730 / 900	100	24	1	6'-8"	6'-11 1/2"	5'-9"	6'-7 1/4"	6'-9 1/4"
	8	4.5 / 6	970 / 1200								
	10	4.5 / 6	1210 / 1500								
	12	4.5 / 6	1450 / 1800								
STJ-1210-	6	4.5 / 6	876 / 1080	120	25	1	8'	6'-11 1/2"	6'-9"	7'-11 1/4"	6'-9 1/4"
	8	4.5 / 6	1164 / 1440								
	10	4.5 / 6	1452 / 1800								
	12	4.5 / 6	1740 / 2160								
STJ-1410-	6	4.5 / 6	1022 / 1260	140	31	1	9'-4"	6'-11 1/2"	7'-11"	9'-3 1/4"	6'-9 1/4"
	8	4.5 / 6	1358 / 1680								
	10	4.5 / 6	1694 / 2100								
	12	4.5 / 6	2030 / 2520								
STJ-1610-	8	4.5 / 6	1552 / 1920	160	24	1	10'-8"	6'-11 1/2"	9'	10'-7 1/4"	6'-9 1/4"
	10	4.5 / 6	1936 / 2400								
	12	4.5 / 6	2320 / 2880								
STJ-1810-	8	4.5 / 6	1746 / 2160	180	24	2	12'	6'-11 1/2"	5'-9"	11'-11 1/4"	6'-9 1/4"
	10	4.5 / 6	2178 / 2700								
	12	4.5 / 6	2610 / 3240								
STJ-2010-	8	4.5 / 6	1940 / 2400	200	24	2	13'-4"	6'-11 1/2"	5'-9"	13'-3 1/4"	6'-9 1/4"
	10	4.5 / 6	2420 / 3000								
	12	4.5 / 6	2900 / 3600								
STJ-2210-	8	4.5 / 6	2134 / 2640	220	24	2	14'-8"	6'-11 1/2"	6'-2"	14'-7 1/4"	6'-9 1/4"
	10	4.5 / 6	2662 / 3300								
	12	4.5 / 6	3190 / 3960								
STJ-2410-	8	4.5 / 6	2328 / 2880	240	25	2	16'	6'-11 1/2"	6'-9"	15'-11 1/4"	6'-9 1/4"
	10	4.5 / 6	2904 / 3600								
	12	4.5 / 6	3480 / 4320								
STJ-2610-	8	4.5 / 6	2522 / 3120	260	25	2	17'-4"	6'-11 1/2"	7'-4"	17'-3 1/4"	6'-9 1/4"
	10	4.5 / 6	3146 / 3900								
	12	4.5 / 6	3770 / 4680								
STJ-2810-	8	4.5 / 6	2716 / 3360	280	32	2	18'-8"	6'-11 1/2"	7'-11"	18'-7 1/4"	6'-9 1/4"
	10	4.5 / 6	3388 / 4200								
	12	4.5 / 6	4060 / 5040								
STJ-3010-	8	4.5 / 6	2910 / 3600	300	24	2	20'	6'-11 1/2"	8'-5"	19'-11 1/4"	6'-9 1/4"
	10	4.5 / 6	3630 / 4500								
	12	4.5 / 6	4350 / 5400								
STJ-3210-	8	4.5 / 6	3104 / 3840	320	24	2	21'-4"	6'-11 1/2"	9'	21'-3 1/4"	6'-9 1/4"
	10	4.5 / 6	3872 / 4800								
	12	4.5 / 6	4640 / 5760								
STJ-3410-	8	4.5 / 6	3298 / 4080	340	24	2	22'-8"	6'-11 1/2"	9'-7"	22'-7 1/4"	6'-9 1/4"
	10	4.5 / 6	4114 / 5100								
	12	4.5 / 6	4930 / 6120								
STJ-3610-	8	4.5 / 6	3492 / 4320	360	26	3	24'	6'-11 1/2"	6'-9"	23'-11 1/4"	6'-9 1/4"
	10	4.5 / 6	4356 / 5400								
	12	4.5 / 6	5220 / 6480								
STJ-3810-	8	4.5 / 6	3686 / 4560	380	28	3	25'-4"	6'-11 1/2"	7'-4"	25'-3 1/4"	6'-9 1/4"
	10	4.5 / 6	4598 / 5700								
	12	4.5 / 6	5510 / 6840								
STJ-4010-	8	4.5 / 6	3880 / 4800	400	30	3	26'-8"	6'-11 1/2"	7'-11"	26'-7 1/4"	6'-9 1/4"
	10	4.5 / 6	4840 / 6000								
	12	4.5 / 6	5800 / 7200								
STJ-4210-	8	4.5 / 6	4074 / 5040	420	32	3	28'	6'-11 1/2"	7'-11"	27'-11 1/4"	6'-9 1/4"
	10	4.5 / 6	5082 / 6300								
	12	4.5 / 6	6090 / 7560								

How to Determine Your Model Number

STJ - 14 10 - 10

NUMBER OF ROWS | NUMBER OF BAGS PER ROW | LENGTH (FT.) OF BAGS

* Guideline based on 10 second off time between pulses and 100 millisecond pulse duration ~ may change based on application.

NOTES:

- INLET SIZE BASED ON 3000 FPM MAXIMUM VELOCITY.
- STANDARD EXHAUST CONNECTION EITHER RIGHT OR LEFT OF HEADER.
- SIX (6) LEG SUPPORTS STANDARD FOR MODELS 2410 - 3010.
  EIGHT (8) LEG SUPPORTS STANDARD FOR MODEL 3210 AND ABOVE.
- STANDARD TROUGH HOPPER HAS SAME DEPTH AS PYRAMIDAL HOPPER
- MAGNEHELIC GAUGE W/ BRACKET, TUBING, & FITTINGS.
- UNLESS OTHERWISE SPECIFIED, TIMERS SHIPPED ASSEMBLED & PRE-WIRED TO SOLENOID ENCLOSURE.
- DRAWING DIMENSIONS ARE SUBJECT TO CHANGE WITHOUT PRIOR NOTICE.

# INDICATES REVISION NUMBER

NOT FOR CONSTRUCTION

All the information herein is confidential and has been transmitted for use solely in operating and maintaining this equipment. Reproduction or transmission of any part of this information to others or use by you for other purposes is unauthorized without the written consent of Sly, Inc. Should this equipment be sold to a third party, all drawings and installation manuals are to be returned to Sly, Inc.
UNAUTHORIZED DUPLICATION, REPRODUCTION OR DISCLOSURE OF THIS INFORMATION IS A VIOLATION OF FEDERAL LAW.

STJ-HT-P-10

SERIAL No.
CUSTOMER
PURCHASE ORDER
FILE NUMBER

DR. TTiffin
DATE: 2/12/2026
SCALE: AS NOTED
CK.
P.E.

SLY AIR POLLUTION CONTROL
Strongsville, OH 44136
slyinc.com
A Division of CPS

CERTIFIED BY:

DWG. NO:

REV.

SIMILAR TO:

STJ-1010 - STJ-4210 Website Sales Drawings.dwg