Sly TubeJet Model STJ (4.5)

(TOP BAG REMOVAL)

Model No.	Bag Length (ft)	Cloth Area (SQ. ft.)	Bag Quantity	Air Usage (SCFM @ 90 psig)*	A	B	C	D	E	F
STJ-1214-	8 10 12	1630 2033 2436	168	31	8'-0"	9'-4"	8'–1"	14'–1"	7'- 11 13/16"	8'- 10 1/16"
STJ-1414-	8 10 12	1901 2372 2842	196	24	9'-4"	9'-4"	8'–1"	14'–1"	9'- 3 13/16"	8'- 10 1/16"
STJ-1614-	8 10 12	2172 2710 3248	224	24	10'-8"	9'-4"	8'–1"	14'–1"	10'- 7 13/16"	8'- 10 1/16"
STJ-1814-	8 10 12	2444 3049 3654	252	24	12'-0"	9'-4"	8'–1"	14'–1"	11'- 11 13/16"	8'- 10 1/16"
STJ-2014-	8 10 12	2716 3388 4060	280	24	13'-4"	9'-4"	8'–1"	14'–1"	13'- 3 13/16"	8'- 10 1/16"
STJ-2214-	8 10 12	2988 3727 4466	308	25	14'-8"	9'-4"	8'–1"	14'–1"	14'- 7 13/16"	8'- 10 1/16"
STJ-2414-	8 10 12	3259 4066 4872	336	25	16'-0"	9'-4"	8'–1"	14'–1"	15'- 11 13/16"	8'- 10 1/16"
STJ-2614-	8 10 12	3531 4404 5278	364	32	17'-4"	9'-4"	8'–1"	14'–1"	17'- 3 13/16"	8'- 10 1/16"
STJ-2814-	8 10 12	3802 4743 5684	392	24	18'-8"	9'-4"	8'–1"	14'–1"	18'- 7 13/16"	8'- 10 1/16"
STJ-3014-	8 10 12	4074 5082 6090	420	24	20'-0"	9'-4"	8'–1"	14'–1"	19'- 11 13/16"	8'- 10 1/16"
STJ-3214-	8 10 12	4346 5421 6496	448	25	21'-4"	9'-4"	8'–1"	14'–1"	20'- 3 13/16"	8'- 10 1/16"
STJ-3414-	8 10 12	4617 5760 6902	476	26	22'-8"	9'-4"	8'–1"	14'–1"	22'- 7 13/16"	8'- 10 1/16"
STJ-3614-	8 10 12	4889 6098 7308	504	28	24'-0"	9'-4"	8'–1"	14'–1"	21'- 11 13/16"	8'- 10 1/16"
STJ-3814-	8 10 12	5160 6437 7714	532	30	25'-4"	9'-4"	8'–1"	14'–1"	25'- 3 13/16"	8'- 10 1/16"
STJ-4014-	8 10 12	5432 6776 8120	560	32	26'-8"	9'-4"	8'–1"	14'–1"	26'- 7 13/16"	8'- 10 1/16"
STJ-4214-	8 10 12	5704 7115 8526	588	33	28'-0"	9'-4"	8'–1"	14'–1"	27'- 11 13/16"	8'- 10 1/16"
STJ-4414-	8 10 12	5975 7454 8932	616	34	29'-4"	9'-4"	8'–1"	14'–1"	29'- 3 13/16"	8'- 10 1/16"
STJ-4614-	8 10 12	6247 7792 9338	644	36	30'-8"	9'-4"	8'–1"	14'–1"	30'- 7 13/16"	8'- 10 1/16"
STJ-4814-	8 10 12	6518 8131 9744	672	37	32'-0"	9'-4"	8'–1"	14'–1"	31'- 11 13/16"	8'- 10 1/16"
STJ-5014-	8 10 12	6790 8470 10150	700	39	33'-4"	9'-4"	8'–1"	14'–1"	33'- 3 13/16"	8'- 10 1/16"

How to Determine Your Model Number

STJ – 15 – 15 – 8

Number of rows — Number of bags per row — Length of bags

* Guideline based on 10 second off time between pulses and 100 millisecond pulse duration ~ may change based on application

NOT FOR CONSTRUCTION

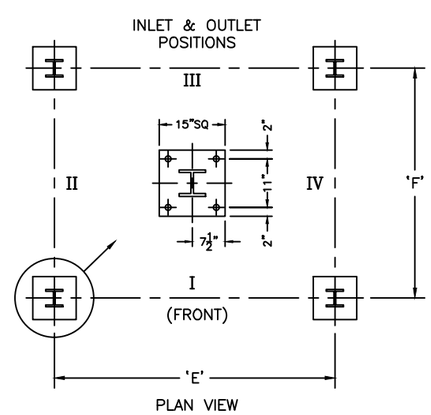

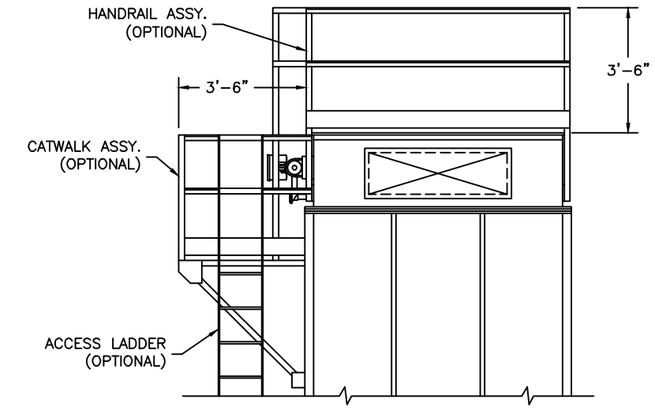

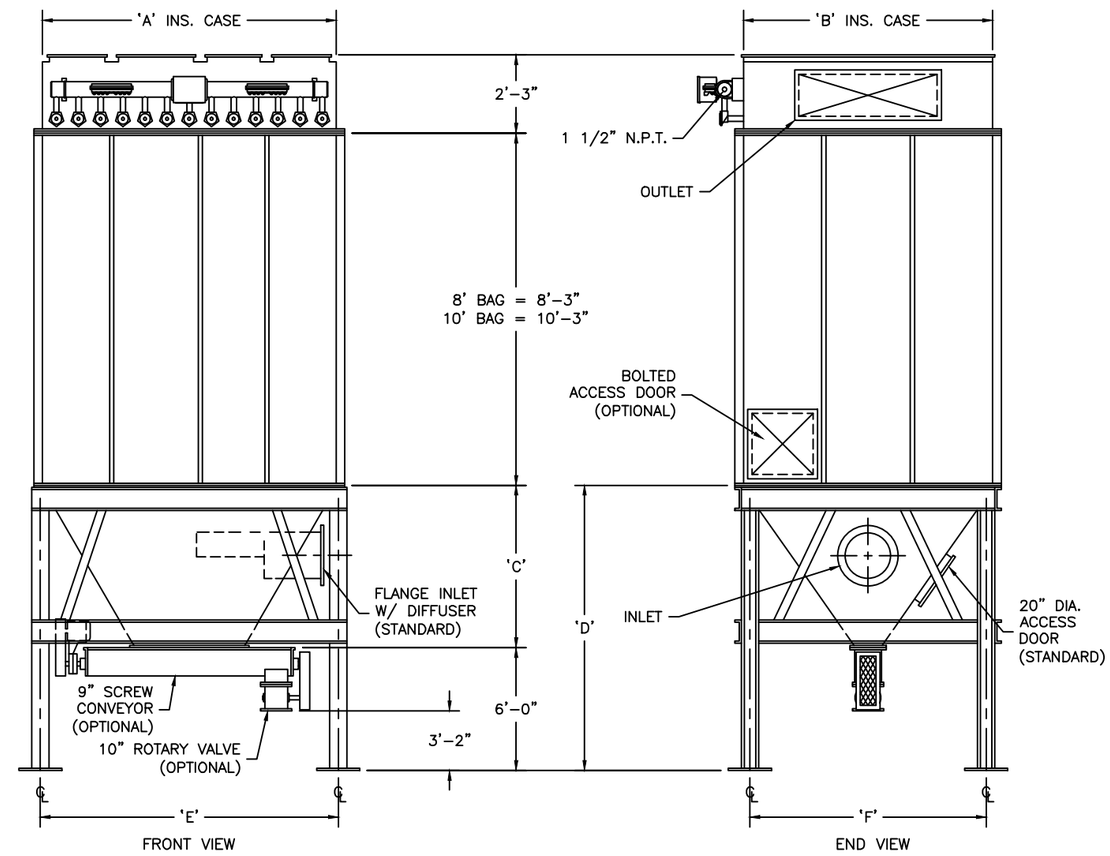

MODEL NO. _____
VOLUME _____ CFM
TEMPERATURE _____ °F
DUST _____
LOADING _____ GR/CF
CLOTH AREA _____ SQ.FT.
NO. OF BAGS _____
A/C RATIO _____ :1
PROCESS _____

NOTES:
- Inlet size based on 3000 fpm maximum velocity.
- Standard exhaust connection either right or left of header.
- Six (6) leg support for model 3115 and all units larger. Center leg at collector centerline.
- Magnehelic gauge w/ bracket, tubing & fittings.
- Unless otherwise specified, timers shipped assembled & pre–wired to solenoid enclosure.
- Drawing dimensions are subject to change without prior notice.

SLY INC.
TECHNOLOGY FOR A CLEAN ENVIROMENT
8300 Dow Circle, Suite 600
Strongsville, OH 44136
1–800–334–2957
In Ohio (440) 891–3200
FAX: (440) 891–3210

STJ–505–3(B)